# MQ0107, MQ0207, MQ0307, MQ0407,MQ0507
## Bimetal Panel instruments with exchangeable scales

Iskra
Iskra Instrumenti, d.d.

**MQ - BIMETAL PANEL INSTRUMENTS**

## FEATURES:

- For measurement of maximum AC currents
- Good read-out survey on larger distance
- Exchangeable dial
- Resistance to mechanical vibrations
- Protective cover for terminals (optional)
- MQ0107, MQ0207, MQ0307, MQ0407are according to DIN 43700
- MQ0507 rail mounting according to DIN 46277 and EN 50022

*Picture 1: Ammeter MQ0207*

## APPLICATION

The bimetallic instruments are intended especially for thermal monitoring of transformers, cables, etc. due to their slow reaction to current changes. They indicate mean r.m.s. current value during the measuring period of the instrument. The instrument does not react to short current pulses essentially. Maximum mean value in a response time period is indicated by the red slave pointer. The latter can be reset or set to zero by means of a knob which can be sealed.

## CONSTRUCTION

Special instrument design enables quick replacement of the scale both in case of a new or an already used instrument. This is especially suitable for instruments which are connected to current transformers .

**The exchangeable scale has a number of advantages:**

- quick and simple adaptation of the instrument to variable user technical requirements
- shorter delivery time
- allows flexible planning

[1)] For assembly MQ0507 rail mounting according to DIN 46277 and EN 50022. Bezel measures are 45x45 mm. Technical data are the same as for MQ0407.

## TECHNICAL DATA

### ACCURACY:

- accuracy class 3

### DESIGN:

- Material of housing: PC
  uninflammable, according to **UL 94 V-0**
- Enclosure protection:Case IP 52, terminal contacts IP 00
  (IP 20 for connection terminals)
  according to **EN 60529**: 1989
- Operating position Vertical
- Test voltage 2 kV rms
  in accordance to **EN 61010-1**: 1990

### AMBIENT CONDITIONS JVF (DIN 40 040)

- Climatic conditions:
  Standards **EN 60051-1**: 1995/01
  **EN 60051-2**: 1984
  **EN 60051-9**: 1988
- Temperature:
  Reference range of operation +18 … +28°C
  Nominal range of operation -25 … +55°C
  Storing -40 … +70°C
- Humidity up to 80% (without condensing)

## MEASURING RATINGS:

1.2A; 6A
xA/1A[1)], xA/5A[1)] for connection to current transformer

| Current transformer ratio[2)] (A) | Rating (A) | Current transformer ratio[2)] (A) | Rating (A) |
|---|---|---|---|
| 10 | 12 | 40 | 48 |
| 15 | 18 | 50 | 60 |
| 20 | 24 | 60 | 72 |
| 25 | 30 | 75 | 90 |
| 30 | 36 | 80 | 96 |
| Consumption (VA) …/1A | | | 1.8 app. |
| …/5A | | | 2.8 app. |
| Response time [3)] (min) | | | 8<br>15[3)]<br>20[3)]<br>30[3)] |

1) Rating of average current is for 20% higher from the current transformer ratio.
2) Table is also relevant for decade multiples
3) Normal response time 8 min, on request 15 min, 20min, 30min.

## SCALE

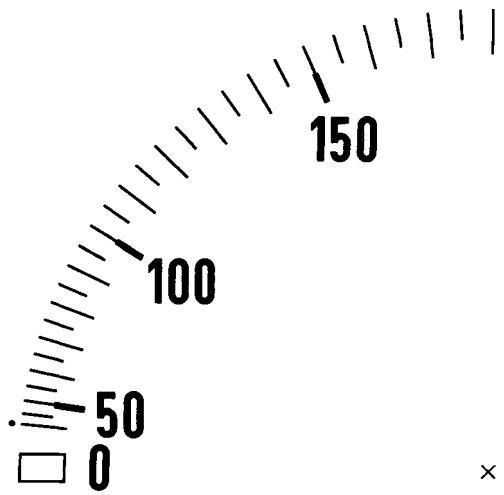


*Picture 2: Drawing of scale: MQ0207*

## EXCHANGING OF SCALES

Press the cover, on top of the instrument, in the direction of the arrow and extract the scale with a suitable tool. After exchanging the scale, carefully close the opening with the cover.

**The instrument must be disconnected during the dial exchange procedure.**

*Picture 3: Exchanging of scales*

*Picture 4: Exchanging of scales*

## ORDERING DATA:

- instrument type,
- current transformer ratio,
- response time.

### ORDERING EXAMPLE:

- MQ0207, 100A/5A, 15min

For ordering scales the same data as in case of ordering the instrument must be state.

- Scale for MQ0207, 80A/1A, 8min

On special demand a protective cover against live parts is provided.

## DIMENSIONAL DRAWINGS:

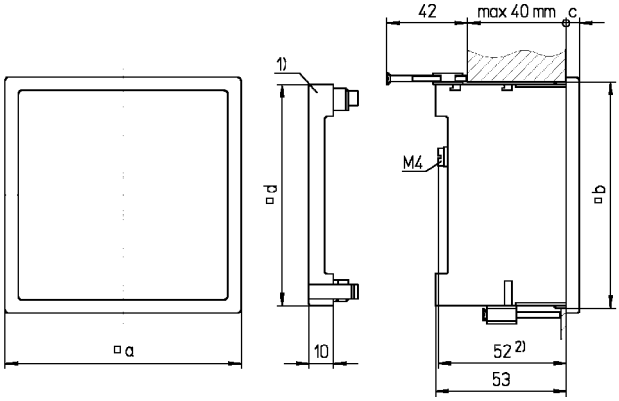


*Picture 5: Dimensional drawing MQ0107, MQ0207, MQ0307 and MQ0407(all dimensions are in mm)*

1) Protective cover (on special request)

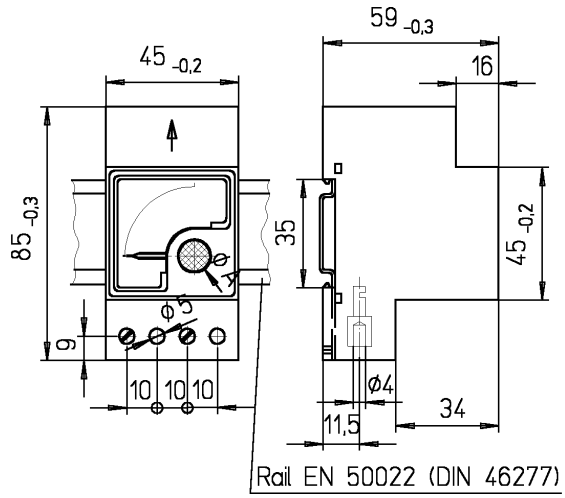


*Picture 6: Dimensional drawing MQ0507 (all dimensions are in mm)*

| Type | | MQ0107 | MQ0207 | MQ0307 | MQ0407 | MQ0507 |
|---|---|---|---|---|---|---|
| Bezel (mm) | □ a | 144 | 96 | 72 | 48 | 45 |
| Panel cut-out (mm) | □ b | $138^{+1,0}$ | $92^{+0,8}$ | $68^{+0,8}$ | $45^{+0,6}$ | -- |
| Bezel height (mm) | c | 8,0 | 5,5 | 5,5 | 5,0 | -- |
| Protect cover (mm) | □ d | 90 | 90 | 66,5 | 42,5 | -- |
| Scales length (mm) | | 135 | 95 | 62 | 41 | 41 |
| Weight approx. (kg) | | 0,4 | 0,2 | 0,18 | 0,14 | 0,14 |

*Table 1: Dimensions and weight*


Iskra
Iskra Instrumenti, d.d.
Otoče 5a
SI-4244 Podnart
Slovenia
Tel.: +386 4 5359 100
Fax: +386 4 5359 205
E-mail: iskra-inst@siol.net
Internet: www.iskra-inst.si



Printed in Slovenia • Subject to change without notice • Version 02 / apr. 2003 • E P22.081.160